EC111-B-TOOLBOX

EC111-B Tub Cart with Locking Toolbox

Product Specifications

Item Number	**EC111-B**
Material	Injection Molded Thermoplastic Resin – Legs: Polyvinyl Chloride (PVC) – Shelves: High Density Polyethylene (HDPE)
Color Options	Black
Cart Dimensions:	35.25”W x 18”D x 36.25”H
Weight	29 lbs.
Shelf Quantity	3
Shelf Dimensions	32”W x 18”D
Shelf Depth	2.5"
Distance Between Shelves	10.5
Casters (4)	4” full swivel; two casters include locking brakes
Weight Capacity	400 lbs.
Made in USA	Yes
Shipping Carton Dims	1 carton: 36”W x 19”D x 13”H
Shipping Weight	29 lbs.
Assembly required	Yes

Item Number	**EC-TOOLBOX-T**
Frame Material	Powder-coated steel (Black)
Frame Thickness	1.5mm thick
Exterior Dimensions	32.25”W x 18.11”D x 4.25”H
Interior Dimensions	31.10”W x 16.93”D x 4.25”H
Weight	26 lbs
Weight Capacity	100 lbs. evenly distributed
Hinge Type	Full-range piano hinge
Lock	Key-lock on top; includes 2 identical keys
Compatibility	Any EC Tub Cart
Shipping Carton Dims	1 carton: 36”W x 21”D x 6”H
Shipping Weight	29 lbs.
Assembly required	No

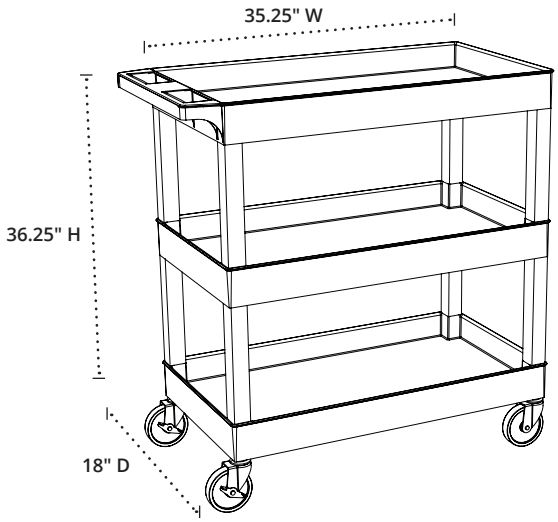

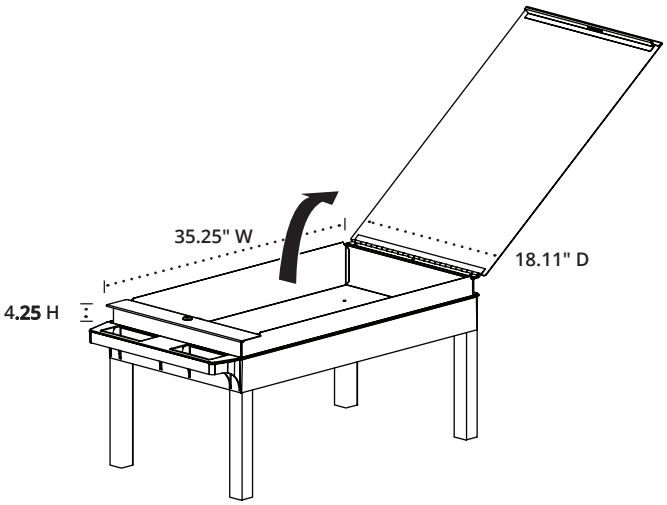

2245 Delany Road, Waukegan, IL 60087
800-323-4656 | Fax 847-244-1818 | www.LuxorFurn.com

LUXOR
INNOVATIVE WORKSPACE PRODUCT SOLUTIONS